Research Article Open Access

K.K. Viswanathan*, K. Karthik, Y.V.S.S. Sanyasiraju, and Z.A. Aziz

Free Vibration Study of Anti-Symmetric Angle-Ply Laminated Plates under Clamped Boundary Conditions

DOI 10.1515/cls-2016-0020
Received Apr 23, 2016; accepted Jun 24, 2016

Abstract: Two type of numerical approach namely, Radial Basis Function and Spline approximation, used to analyse the free vibration of anti-symmetric angle-ply laminated plates under clamped boundary conditions. The equations of motion are derived using YNS theory under first order shear deformation. By assuming the solution in separable form, coupled differential equations obtained in term of mid-plane displacement and rotational functions. The coupled differential is then approximated using Spline function and radial basis function to obtain the generalize eigenvalue problem and parametric studies are made to investigate the effect of aspect ratio, length-to-thickness ratio, number of layers, fibre orientation and material properties with respect to the frequency parameter. Some results are compared with the existing literature and other new results are given in tables and graphs.

Keywords: Free vibration; laminated plate; anti-symmetric; angle-ply; splines; radial basis function

1 Introduction

The application of composite materials increases drastically in civil, aerospace, automobile and aeronautic fields. In designing structures, the stability and vibration plays an important role especially when comes to thin and it subjected to high dynamic loads. In case the structure designed with high natural frequency, the adjustment has made to the material used, thickness or the boundary conditions to reduce the free vibration frequencies. Thus, many researcher shows more interest to study the mechanical behavior of these composite materials.

The plate studies initiate by Kirchoff [1], where his study produce an inaccurate results for Mindlin plate [2] due to ignorance of shear deformation. Stavsky [3] has come out with shear deformation theory for isotropic plates and generalised to laminated anisotropic plates by Yang *et al.* [4], and there are numerous numerical approaches approached by many researchers to study the plate's mechanical behaviour under first order shear deformation theory using various boundary conditions.

Radial basis function is scattered data approximation where it depends on Euclidian distance between collocation points. Kansa [5, 6] worked on partial differential equations using RBF method, where this method was adopted here to approximate the ordinary differential equations. Apart from this Kansa, few other researchers, Ferreira [7, 8] worked on plates using RBF method.

Liew *et al.*, Rodrigues *et al.*, and Liu *et al.* [9–11] show some interest on buckling analysis using radial basis function for laminated plates. The plates is not only analysed under first order shear deformation theory but, Ferreira [12–14] and his group produced numerous research on plates using RBF under higher order shear deformation theories since last few years, and Liu *et al.* [15] also investigated laminated composite plates with same method. Meanwhile, Sanyasiraju [16], also used this technique to solve some problems

Spline is another type of approximation involves scattered data interpolation, where it used widely in numerical analysation. This method introduced by Schoenberg for a special study, then developed by Bickley [17] for two point boundary problems. Viswanathan and Navaneethakrishnan [18, 19], Viswanathan and Kim [20], and Viswanathan and Lee [21] showed their interest in plate study, and they used spline technique to solve various problems involving plates and shells. Irie *et al.* [22], Irie and Yamada [23] also had done some studies on free vibration of rotating non-

***Corresponding Author: K.K. Viswanathan:** UTM Centre for Industrial and Applied Mathematics, Dept. of Mathematical Sciences, Faculty of Science, Universiti Teknologi Malaysia, 81310 Johor Bahru, Johor, Malaysia; E-mail: visu20@yahoo.com
K. Karthik, Z.A. Aziz: UTM Centre for Industrial and Applied Mathematics, Dept. of Mathematical Sciences, Faculty of Science, Universiti Teknologi Malaysia, 81310 Johor Bahru, Johor, Malaysia
Y.V.S.S. Sanyasiraju: Department of Mathematics, Indian Institute of Technology Madras, Chennai, India

uniform discs and annular plate with variable thickness respectively.

Tornabene *et al.* [24] applied the radial basis function method to doubly-curved laminated composite shells. This work followed by Fantuzzi *et al.* [25, 26], where they researches deals with Radial Basis Function method for laminated composite arbitrarily shaped plates. Recently few researcher shows significant interest in applying mesh free methods in their research [27–30]. Sahu [31] have done some work on static and free vibration analysis of laminated composited skew plate with and without cutout using finite element method.

The objective of this study is to analyse the free vibration of anti-symmetry angle-ply laminated plates including shear deformation under clamped-clamped boundary condition using two different numerical methods, Spline and Radial Basis Function. The problem is formulated using YNS (Yang, Norris and Stavsky) theory, where the second order differential equation obtained in term of mid-plane displacements and rotational function, and the solutions is assumed in separable form and ordinary differential equations is obtained. Then, for the first case, the displacements and rotational functions are approximated using spline, for second case the differential functions are approximated using Radial Basis Function. The final equation becomes generalized eigenvalue problem for both the cases. The frequency parameter is analysed with respect to aspect ratio, length-to-thickness ratio and number of layers by considering different type of materials.

2 Problem formulation

A rectangular plate with length a, width b and constant thickness h, which made up of even number of thin layers is given in Fig. 1 with angle orientation θ and $-\theta$. Based on YNS theory, the displacement components are consider as

$$\begin{aligned} u &= u_0(x, y, t) + z\psi_x(x, y, t), \\ v &= v_0(x, y, t) + z\psi_y(x, y, t), \\ w &= w(x, y, t) \end{aligned} \tag{1}$$

where u, v, and w is displacement component in x, y and z directions respectively. u_0 and v_0 are the displacements at middle surface of the plate and ψ_x and ψ_y are shear rotation in middle surface of plate at any point and t is time.

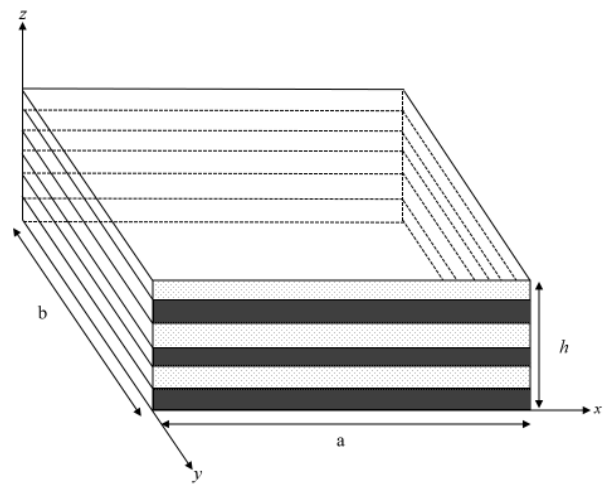

Figure 1: Laminated plate with constant thickness.

Using strain-displacement and stress-strain relations, the stress and moment resultant written as

$$\begin{pmatrix} N_x \\ N_y \\ N_{xy} \\ M_x \\ M_y \\ M_{xy} \end{pmatrix} = \begin{pmatrix} A_{11} & A_{12} & A_{16} & B_{11} & B_{12} & B_{16} \\ A_{12} & A_{22} & A_{26} & B_{12} & B_{22} & B_{26} \\ A_{16} & A_{26} & A_{66} & B_{16} & B_{26} & B_{66} \\ B_{11} & B_{12} & B_{16} & D_{11} & D_{12} & D_{16} \\ B_{12} & B_{22} & B_{26} & D_{12} & D_{22} & D_{26} \\ B_{16} & B_{26} & B_{66} & D_{16} & D_{26} & D_{66} \end{pmatrix} \times \begin{pmatrix} \varepsilon_x \\ \varepsilon_y \\ \gamma_{xy} \\ \psi_{x,x} \\ \psi_{y,y} \\ \psi_{x,y} + \psi_{y,x} \end{pmatrix}$$

and

$$\begin{pmatrix} Q_x \\ Q_y \end{pmatrix} = \begin{pmatrix} kA_{45} & kA_{55} \\ kA_{44} & kA_{45} \end{pmatrix} \begin{pmatrix} \psi_x + w_{,x} \\ \psi_y + w_{,y} \end{pmatrix}$$

The stiffness coefficients are define as A_{ij}, B_{ij} and D_{ij}

$$\begin{aligned} A_{ij} &= \sum_k \overline{Q}_{ij}(z_k - z_{k-1}) \\ B_{ij} &= \frac{1}{2}\sum_k \overline{Q}_{ij}(z_k^2 - z_{k-1}^2) \quad \text{for} \quad i, j = 1,\ 2,\ 6\ldots \\ D_{ij} &= \frac{1}{3}\sum_k \overline{Q}_{ij}(z_k^3 - z_{k-1}^3) \\ A_{ij} &= k\sum_k \overline{Q}_{ij}(z_k - z_{k-1}) \quad \text{for} \quad i, j = 4, 5\ldots \end{aligned}$$

where k is shear correction factor and the quantities $\overline{Q}_{ij}$ are given in Appendix A.

The displacement and rotational functions are assumed as,

$$\begin{aligned} u_0(x,y,t) &= u(x,y)e^{i\omega t}, \\ v_0(x,y,t) &= v(x,y)e^{i\omega t}, \\ w(x,y,t) &= w(x,y)e^{i\omega t}, \\ \psi_x(x,y,t) &= \psi_x(x,y)e^{i\omega t}, \\ \psi_y(x,y,t) &= \psi_y(x,y)e^{i\omega t}. \end{aligned} \tag{2}$$

where ω is the angular frequency of the plate and t is the time.

By substituting the Eq. (2) into stress-strain and strain-displacement relations, we get the following equations,

$$\begin{aligned} &\left[A_{11}\frac{\partial^2}{\partial x^2} + 2A_{16}\frac{\partial^2}{\partial x\partial y} + A_{66}\frac{\partial^2}{\partial y^2} + I_0\omega^2\right]u \\ &+ \left[A_{16}\frac{\partial^2}{\partial x^2} + (A_{12}+A_{66})\frac{\partial^2}{\partial x\partial y} + A_{26}\frac{\partial^2}{\partial y^2}\right]v \\ &+ \left[B_{11}\frac{\partial^2}{\partial x^2} + 2B_{16}\frac{\partial^2}{\partial x\partial y} + B_{66}\frac{\partial^2}{\partial y^2}\right]\psi_x \\ &+ \left[B_{16}\frac{\partial^2}{\partial x^2} + (B_{12}+B_{66})\frac{\partial^2}{\partial x\partial y} + B_{26}\frac{\partial^2}{\partial y^2}\right]\psi_y = 0 \\ &\left[A_{16}\frac{\partial^2}{\partial x^2} + (A_{12}+A_{66})\frac{\partial^2}{\partial x\partial y} + A_{26}\frac{\partial^2}{\partial y^2}\right]u \\ &+ \left[A_{66}\frac{\partial^2}{\partial x^2} + 2A_{26}\frac{\partial^2}{\partial x\partial y} + A_{22}\frac{\partial^2}{\partial y^2} + I_0\omega^2\right]v \\ &+ \left[B_{16}\frac{\partial^2}{\partial x^2} + (B_{12}+B_{66})\frac{\partial^2}{\partial x\partial y} + B_{26}\frac{\partial^2}{\partial y^2}\right]\psi_x \\ &+ \left[B_{66}\frac{\partial^2}{\partial x^2} + 2B_{26}\frac{\partial^2}{\partial x\partial y} + B_{22}\frac{\partial^2}{\partial y^2}\right]\psi_y = 0 \\ &\left[B_{11}\frac{\partial^2}{\partial x^2} + 2B_{16}\frac{\partial^2}{\partial x\partial y} + B_{66}\frac{\partial^2}{\partial y^2}\right]u \\ &+ \left[B_{16}\frac{\partial^2}{\partial x^2} + (B_{12}+B_{66})\frac{\partial^2}{\partial x\partial y} + B_{26}\frac{\partial^2}{\partial y^2}\right]v \\ &+ \left[D_{11}\frac{\partial^2}{\partial x^2} + 2D_{16}\frac{\partial^2}{\partial x\partial y} + D_{66}\frac{\partial^2}{\partial y^2} - kA_{55} - kA_{45}\frac{\partial}{\partial y}\right. \\ &\left. + I_1\omega^2\right]\psi_x + \left[D_{16}\frac{\partial^2}{\partial X^2} + (D_{12}+D_{66})\frac{\partial^2}{\partial x\partial y} + D_{22}\frac{\partial^2}{\partial y^2}\right]\psi_y \\ &- \left[kA_{45}\frac{\partial}{\partial y} + kA_{55}\frac{\partial}{\partial x}\right]w = 0 \\ &\left[B_{16}\frac{\partial^2}{\partial x^2} + (B_{12}+B_{66})\frac{\partial^2}{\partial x\partial y} + B_{26}\frac{\partial^2}{\partial y^2}\right]u \\ &+ \left[B_{66}\frac{\partial^2}{\partial x^2} + 2B_{26}\frac{\partial^2}{\partial x\partial y} + B_{22}\frac{\partial^2}{\partial y^2}\right]v \\ &+ \left[D_{16}\frac{\partial^2}{\partial x^2} + (D_{12}+D_{66})\frac{\partial^2}{\partial x\partial y} + D_{26}\frac{\partial^2}{\partial y^2}\right]\psi_x \\ &+ \left[D_{66}\frac{\partial^2}{\partial x^2} + 2D_{26}\frac{\partial^2}{\partial x\partial y} + D_{22}\frac{\partial^2}{\partial y^2} - kA_{44} - kA_{45}\frac{\partial}{\partial y}\right. \\ &\left. + I_1\omega^2\right]\psi_y - \left[kA_{44}\frac{\partial}{\partial y} + kA_{45}\frac{\partial}{\partial x}\right]w = 0 \\ &[kA_{55} + kA_{45}]\frac{\partial\psi_x}{\partial x} \\ &+ [kA_{44} + kA_{45}]\frac{\partial\psi_y}{\partial x} \\ &+ \left[kA_{55}\frac{\partial^2}{\partial x^2} + 2kA_{45}\frac{\partial^2}{\partial x\partial y} + kA_{44}\frac{\partial^2}{\partial y^2} + I_0\omega^2\right]w = 0 \end{aligned} \tag{3}$$

The displacement and rotation functions are assumed in separable form as

$$\begin{aligned} u(x,y,t) &= U(x)\cos\left(n\pi y/b\right), \\ v(x,y,t) &= V(x)\sin\left(n\pi y/b\right), \\ w(x,y,t) &= W(x)\sin\left(n\pi y/b\right), \\ \psi_x(x,y,t) &= \psi_x(x)\sin\left(n\pi y/b\right), \\ \psi_y(x,y,t) &= \psi_y(x)\cos\left(n\pi y/b\right). \end{aligned} \tag{4}$$

This means that the plates are simply supported along $y = 0$ and $y = b$ and the non-dimensional parameters are introduce as follows

$$\begin{aligned} &\lambda = \omega a\sqrt{(I_0/A_{11})}, && \text{frequency parameter} \\ &\phi = a/b, && \text{aspect ratio} \\ &X = x/a, && \text{distance coordinate} \\ &H^* = a/h && \text{length-to-thickness ratio} \end{aligned} \tag{5}$$

where A_{11} is standard extensional rigidity coefficient. For the case of anti-symmetric angle-ply lamination plates the coefficients A_{16}, A_{26}, A_{45}, B_{11}, B_{12}, B_{22}, B_{66}, D_{16} and D_{26} is assumed identically zero. By substituting Eqs (4) and (5) into Eq. (3) the following matrix obtained,

$$\begin{bmatrix} L_{11} & L_{12} & L_{13} & L_{14} & L_{15} \\ L_{21} & L_{22} & L_{23} & L_{24} & L_{25} \\ L_{31} & L_{32} & L_{33} & L_{34} & L_{35} \\ L_{41} & L_{42} & L_{43} & L_{44} & L_{45} \\ L_{51} & L_{52} & L_{53} & L_{54} & L_{55} \end{bmatrix} \begin{pmatrix} U \\ V \\ W \\ \Psi_X \\ \Psi_Y \end{pmatrix} = 0 \tag{6}$$

where L_{ij} ($ij = 1, 2, 3, 4, 5$) are the differential operators, given in Appendix B.

3 Method of solution

Two types of approximations are used in this study. One is the Spline approximation and another is the radial basis function approximation. Clamped-clamped boundary condition are applied in both cases.

3.1 Spline Formulation

Spline function is a lower order approximation and fast convergence with high accuracy. The displacement $U(X)$,

$V(X)$ and $W(X)$ and rotation functions $\Psi_X(X)$ and $\Psi_Y(X)$ are approximated by using cubic spline functions.

$$U(X) = a_0 + a_1X + a_2X^2 + \sum_{j=0}^{N-1} b_j(X - X_j)^3 H(X - X_j),$$
$$V(X) = c_0 + c_1X + c_2X^2 + \sum_{j=0}^{N-1} d_j(X - X_j)^3 H(X - X_j),$$
$$W(X) = e_0 + e_1X + e_2X^2 + \sum_{j=0}^{N-1} f_j(X - X_j)^3 H(X - X_j),$$
$$\Psi_X(X) = g_0 + g_1X + g_2X^2 + \sum_{j=0}^{N-1} p_j(X - X_j)^3 H(X - X_j),$$
$$\Psi_Y(X) = l_0 + l_1X + l_2X^2 + \sum_{j=0}^{N-1} q_j(X - X_j)^3 H(X - X_j), \quad (7)$$

where $H\left(X - X_j\right)$ is Heaviside function and N in the number of interval between [0,1]. The collocation points chosen from $X = X_s = s/N$ where $s = 0, 1, 2, \ldots, N$, and the spline produce $(5N + 15)$ coefficients for $(5N + 5)$ homogeneous equation.

Here, clamped-clamped (C-C) boundary condition is considered at x-axis, to get ten more equations and making a total of $(5N + 15)$ homogeneous equations, to obtain the generalized eigenvalue problem. The resulting equations can be written in form of

$$[M]\{q\} = \lambda^2[P]\{q\} \quad (8)$$

Here $[M]$ and $[P]$ are square matrices and $\{q\}$ is column matrix also known as eigenvector and λ is the eigenparameter.

3.2 Radial Basis Function Formulation

Radial basis function is one of the mesh free method which depends on distance of points from center. The distance from the center represent as $g(||X - X_j, c||)$, X_j is center point, c is shape parameter, and $||X - X_j, c||$ is the Euclidian norm. Multiquadrics radial basis function is one of approach to solve differential equations. The RBF interpolant is represented as

$$Lu(X) = s(X) = \sum_{j=1}^{N} a_j g_j \left(\left\|X - X_j\right\|, c\right) \quad (9)$$

The procedure of estimating the parameter is on selecting the basis function centres by using input vector either algorithmically or at random and setting them to be centres [32, 33]. The parameter is fixed as randomly as 1. The differential functions $U(X)$, $V(X)$, and $W(X)$ and rotation functions Ψ_X and Ψ_Y were approximated by using RBF interpolant as

$$L_1\overline{U}(X) = \sum_{j=1}^{N} a_j g_j \left(\left\|X - X_j\right\|\right),$$
$$L_1\overline{V}(X) = \sum_{j=1}^{N} b_j g_j \left(\left\|X - X_j\right\|\right),$$
$$L_1\overline{W}(X) = \sum_{j=1}^{N} c_j g_j \left(\left\|X - X_j\right\|\right),$$
$$L_1\overline{\Psi}_X(X) = \sum_{j=1}^{N} d_j g_j \left(\left\|X - X_j\right\|\right),$$
$$L_1\overline{\Psi}_Y(X) = \sum_{j=1}^{N} e_j g_j \left(\left\|X - X_j\right\|\right), \quad (10)$$

By substitute Eq. (10) into equilibrium equation, Radial basis function produce 5N parameter. The generalized eigenvalue problem of resulting equations can be written similar form as Eq. (8).

4 Numerical results

Before proceeding to the study, comparative studies have been carried out to validate the obtained results. Table 1 shows the results obtained by both methods and compared with Patel *et al.* [34]. The values are considered as follows:

$$E_l = 3.58 \text{ GPa}, \quad E_t = 0.00909 \text{ GPa},$$
$$G_{12} = G_{13} = 0.0037 \text{ GPa}, \quad G_{23} = 0.0029 \text{ GPa},$$
$$\upsilon_{12} = 0.416.$$

The fundamental frequency parameter, λ, calculated for bimodular material laminated plate with aspect ratio $(a/b = 2)$ and thickness, $h = 1/10$ with angle orientation 15° and 30° for 2 layers and 4 layers plate. From the table, the Spline method gives higher frequency values compared to the RBF method for the plates with ply angle 15°. The differences between Spline and RBF technique are 0.521 and 0.151 for the plates with 2 and 4 layers respectively. For the plates with ply angle 30°, the RBF method gives higher values compared to the Spline function. The difference between both the methods is 0.977 and 0.171 for the two and four layered plates respectively. The present results shown in the table gives close agreement with the Patel *et al.*

In this study the effect of frequency parameter with respect to the plate aspect ratio (a/b), length-to-thickness

Table 1: Comparison of non-dimensional frequency $\lambda = \omega a(\rho/E_2h^2)^{1/2}$ for different angle θ with $a/b = 2$ and $h = 1/10$.

		Present		Patel *et al.*
θ	Layers	Spline	RBF	[34]
15	2	6.247	5.726	6.4128
	4	7.966	7.815	6.6739
30	2	8.854	9.831	10.793
	4	10.33	10.501	12.949

Table 2: The effect of plate aspect ratio (a/b) on the frequency parameter of a clamped-clamped two layered rectangle plate with $\theta = 45°/-45°$ with material arranged as KGE-KGE.

	method	
a/b	Spline	RBF
0.2	0.4241	0.4014
0.4	0.4437	0.4206
0.6	0.4759	0.4463
0.8	0.5199	0.4953
1	0.5751	0.6030
1.2	0.6406	0.6653
1.4	0.7157	0.7428
1.6	0.7998	0.8164
1.8	0.8921	0.9072
2	0.9920	1.1160

ratio (a/h) with different angle and different number of layers for anti-symmetric plates with shear correction factor, K is fixed as 5/6 and analysed. The plates are assumed to be two and four layered, which made of materials (KGE) and (AGE) [20]. The results are shown in tables and graphs for both the methods using Spline and Radial Basis Function.

Table 2 and 3 shows the effect of aspect ratio on fundamental frequency parameter, $\lambda = \omega a\sqrt{\rho/A_{11}}$, for clamped-clamped two layered rectangle plates with ply angle $45°/-45°$ using material KGE and AGE respectively. Table 4 and 5 depict the free vibration of four layered plates with respect to aspect ratio under clamped boundary conditions with material arrangement as KGE-AGE-AGE-KGE and AGE-KGE-KGE-AGE with ply angle $45°/-45°/45°/-45°$. The aspect ratio of the plates varies from 0.2 to 2.

The values of the fundamental frequency parameter increases with the increase in the aspect ratio, and the difference between the corresponding values is very small. The vibration value which calculated using RBF is lower than the Spline in the range $-0.2 \le a/b \le 0.6$ and vice versa from $1.0 \le a/b \le 2.0$ for two layered plates. The maximum difference between set of values of Table 2 is 0.1240

Table 3: The effect of plate aspect ratio (a/b) on the frequency parameter of a clamped-clamped two layered rectangle plate with $\theta = 45°/-45°$ with material arranged as AGE-AGE.

	method	
a/b	Spline	RBF
0.2	0.4249	0.4115
0.4	0.4443	0.4309
0.6	0.4762	0.457
0.8	0.5199	0.5526
1	0.5749	0.6210
1.2	0.6404	0.6838
1.4	0.7156	0.7647
1.6	0.7999	0.8475
1.8	0.8927	0.9968
2	0.9933	1.1538

Table 4: Comparison of two methods for effect of plate aspect ratio (a/b) on the frequency parameter of a clamped-clamped four layered rectangle plate with $\theta = 45°/-45°/45°/-45°$ with material arranged as KGE-AGE-AGE-KGE.

	method	
a/b	Spline	RBF
0.2	0.4905	0.5021
0.4	0.5156	0.5279
0.6	0.5559	0.5687
0.8	0.6102	0.6291
1	0.6769	0.7019
1.2	0.7549	0.7816
1.4	0.8431	0.8728
1.6	0.9407	0.9721
1.8	1.0469	1.0516
2	1.1697	1.2215

and the minimum difference is 0.0151, with mean value of 0.03354, and for Table 3, the maximum and minimum difference is 0.1605 and 0.0134 respectively. Whereas for four layered plates, the Spline approximation produce higher values compared to RBF technique for the material arranged as KGE-AGE-AGE-KGE, and for material arranged as AGE-KGE-KGE-AGE the Spline approximation gives lower results compared RBF results from range $0.2 \le a/b \le 1.0$, and vice versa from $a/h > 1.0$. From Table 4, the difference percentage between the corresponding values varies between 2.0898% and 23.40325%. The differences for corresponding values in Table 5 varies from 0.0116 and 0.0605 with the mean 0.0234. The frequency value shows sudden hike when the number of layers increase from two to four, and for two layered, material arrangements KGE-KGE and

Table 5: Comparison of two methods for effect of plate aspect ratio (a/b) on the frequency parameter of a clamped-clamped four layered rectangle plate with $\theta = 45°/-45°/45°/-45°$ with material arranged as AGE-KGE-KGE-AGE.

	method	
a/b	Spline	RBF
0.2	0.5260	0.5178
0.4	0.5513	0.5433
0.6	0.5923	0.5826
0.8	0.6478	0.6454
1	0.7365	0.7311
1.2	0.7971	0.8107
1.4	0.8886	0.9034
1.6	0.9899	1.0016
1.8	1.1002	1.1382
2	1.2184	1.2849

Table 6: The effect of ply angle (θ)) on the frequency parameter of a clamped-clamped two layered rectangle plate with $a/b = 1$.

	method	
θ	Spline	RBF
0	0.4237	0.4213
10	0.4031	0.3999
20	0.3986	0.3925
30	0.4327	0.4109
40	0.5064	0.5991
50	0.6303	0.6600
60	0.8115	0.8288

for four layered plates with material arranged as KGE-AGE-AGE-KGE has lower frequency.

Fig. 2 shows effect of plate length-to-thickness ratio (a/h) on the frequency parameter calculated using Spline approximations and RBF. Here three different cases of a/b is considered as, $a/b = 1.0$, 1.5, and 2.0 and a/h is varies from 10 to 60. Fig. 2(a) shows that, the frequency parameter values obtained using RBF is slightly higher compared to the value obtained by spline methods for $a/h = 10$, 20 and 30, the results are vice versa for other values of a/h. In Fig. 2(b) the frequency parameter obtained by using both the method are almost same. In Fig. 2(c), the frequency parameter values obtained using Radial Basis Function method is higher compared to the value obtained from Spline. For $a/b = 1.0$ the highest difference between these two sets of values are 0.0419 and 0.0004 is the smallest difference with mean of difference 0.02. Whereas 0.0444 and 0.0033 will be the greatest and smallest difference for the set of data of $a/b = 1.5$, and the mean for this data is

Table 7: The effect of ply angle (θ) on the frequency parameter of a clamped-clamped two layered rectangle plate $a/b = 1.5$.

	method	
θ	Spline	RBF
0	0.4447	0.4213
10	0.4391	0.3999
20	0.4566	0.3925
30	0.5218	0.4109
40	0.6465	0.5991
50	0.8543	0.6600
60	1.1654	0.8288

Table 8: The effect of ply angle (θ) on the frequency parameter of a clamped-clamped two layered rectangle plate $a/b = 2$.

	method	
θ	Spline	RBF
0	0.4917	0.4898
10	0.4979	0.4906
20	0.5396	0.5336
30	0.6421	0.6375
40	0.8292	0.7037
50	1.1411	1.3022
60	1.6129	1.8416

0.0181. For $a/b = 2.0$ the mean difference of two data is 0.06633 with the range of differences between the data is 0.1495 and 0.0157.

Table 6–8 represent the comparison of the value calculated using Spline and RBF approximation for effect of ply angle (θ) and aspect ratio (a/b) on the frequency parameter using material KGE. The frequency is evaluated for θ from 0° to 60° with increase of 10° and the material arrange as KGE-KGE. The frequency of the plate increases when θ increases from 0° to 60° for all cases of a/b, ($a/b = 1$, $a/b = 1.5$, and $a/b = 2$). The mean value of the differences between the two set of data for Table 6 is 0.02474 with greatest difference value of 0.1732 and the minimum difference value is 0.0024. For Table 7 the greatest difference value is 0.1825 and the minimum value is 0.0022 with 0.05166 mean value. The difference of the frequency value for Table 8 is vary from 0.0019 to 0.2287 with mean = 0.07644. From the data obtained, the frequency parameter is smaller for lower aspect ratio and ply angle.

The frequency parameter has been analysed with respect to ply angle which vary from 0° to 60°, with $a/b = 1$, 1.5, and 2, and a/h fixed as 10. The results are delineated in Fig. 3(a), 3(b) and 3(c). In this study, the free vibration of plate increases rapidly from angle 20° and onwards,

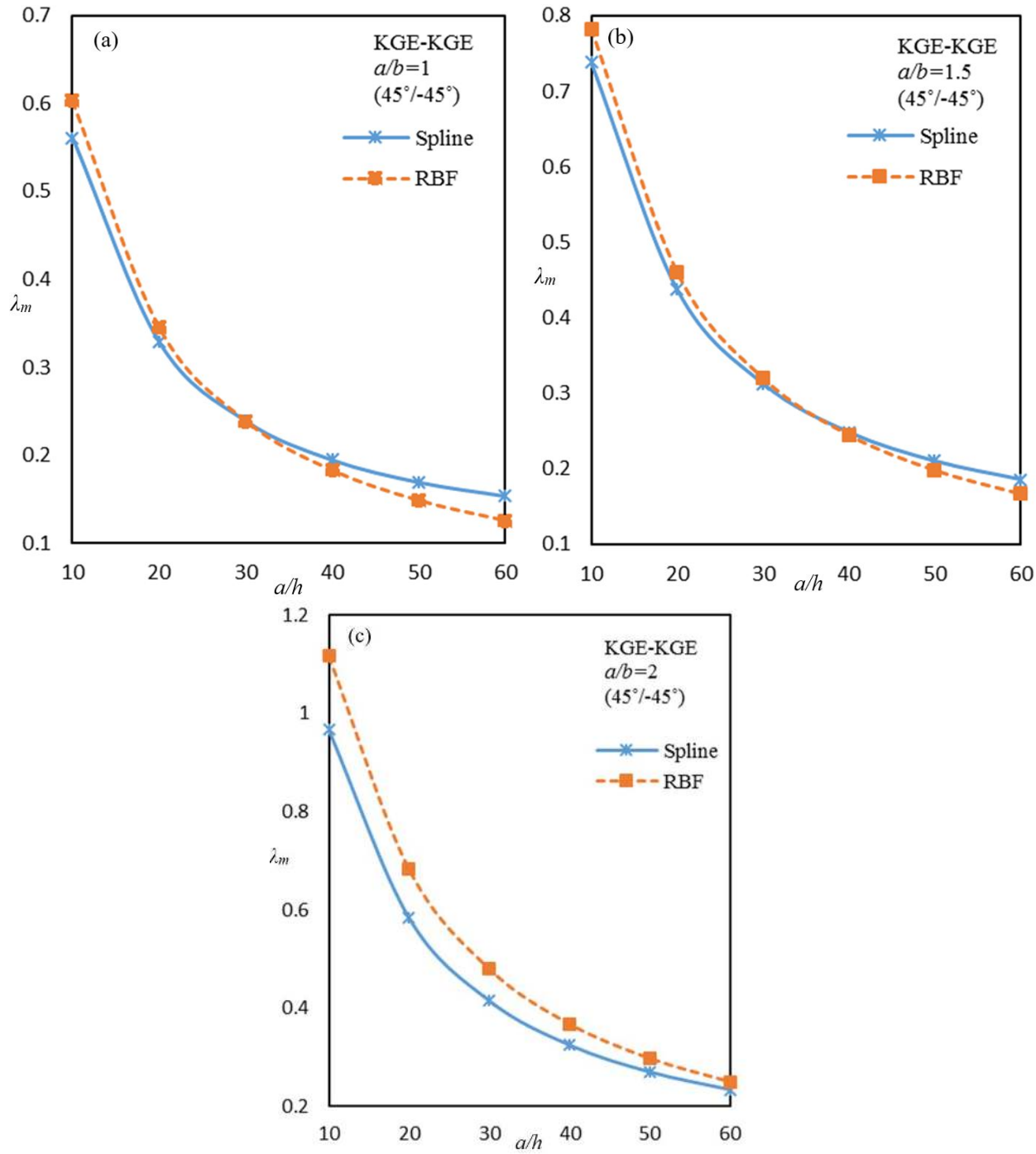

Figure 2: Comparison of two methods for effect of plate length-to-thickness ratio (a/h) on the frequency parameter of a clamped-clamped two layered rectangle plate.

whereas for the range of angle between $0^\circ \leq \theta < 20^\circ$, the frequency parameter values increases slowly. Both the Spline and RBF methods gives similar shape of graph and the frequency values obtained using both the methods varied in small range. For $a/b = 1$, the greatest difference between both the method's corresponding value is, 0.0064, and the smallest difference is 0.0024 with mean value 0.0035. Whereas, for $a/b = 1.5$, the range of difference is varied from 0.0021 to 0.0106, and the mean is 0.0045. The difference varied from 0.0013 to 0.0276 with mean difference 0.00721 for $a/b = 2$. The aspect ratio with

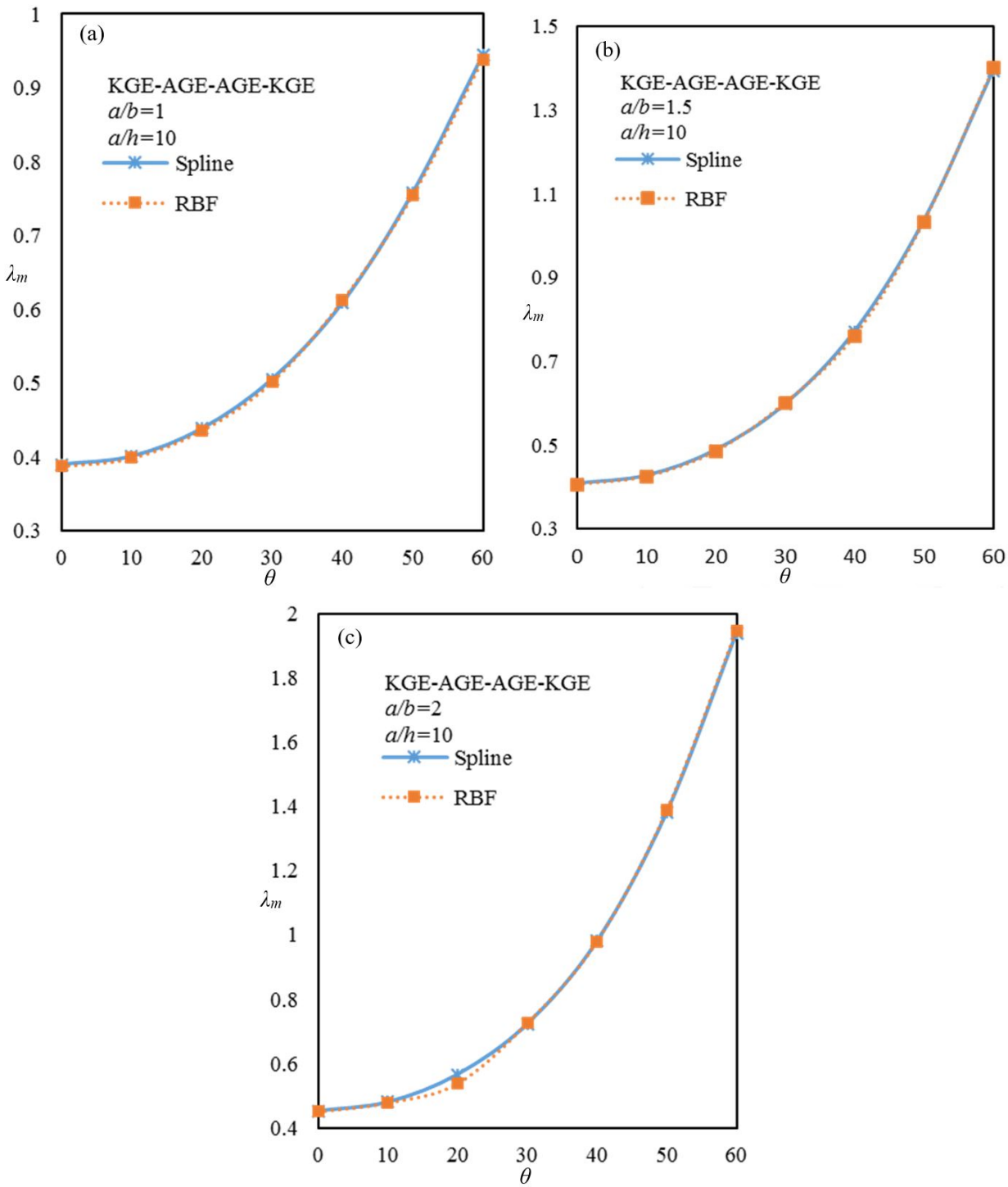

Figure 3: Comparison of two methods for effect of plate angle (θ) on the frequency parameter of a clamped-clamped four layered rectangle plate.

lower value produce lower frequency parameter compared to those higher values.

Figure 4 depict the free vibration of four layered plates with respect to ply angles with length-to-thickness ratio fixed as 1/10. For this case, the plates are arranged as AGE-KGE-KGE-AGE and aspect ratio, a/b fixed as 1.0, 1.5, and 2.0. From the figure, the frequency parameter increase slowly from ply angle 0° to 20°, and it increase rapidly from angle 20° and onwards. The values obtain by Spline and RBF differ in small range and the maximum differ-

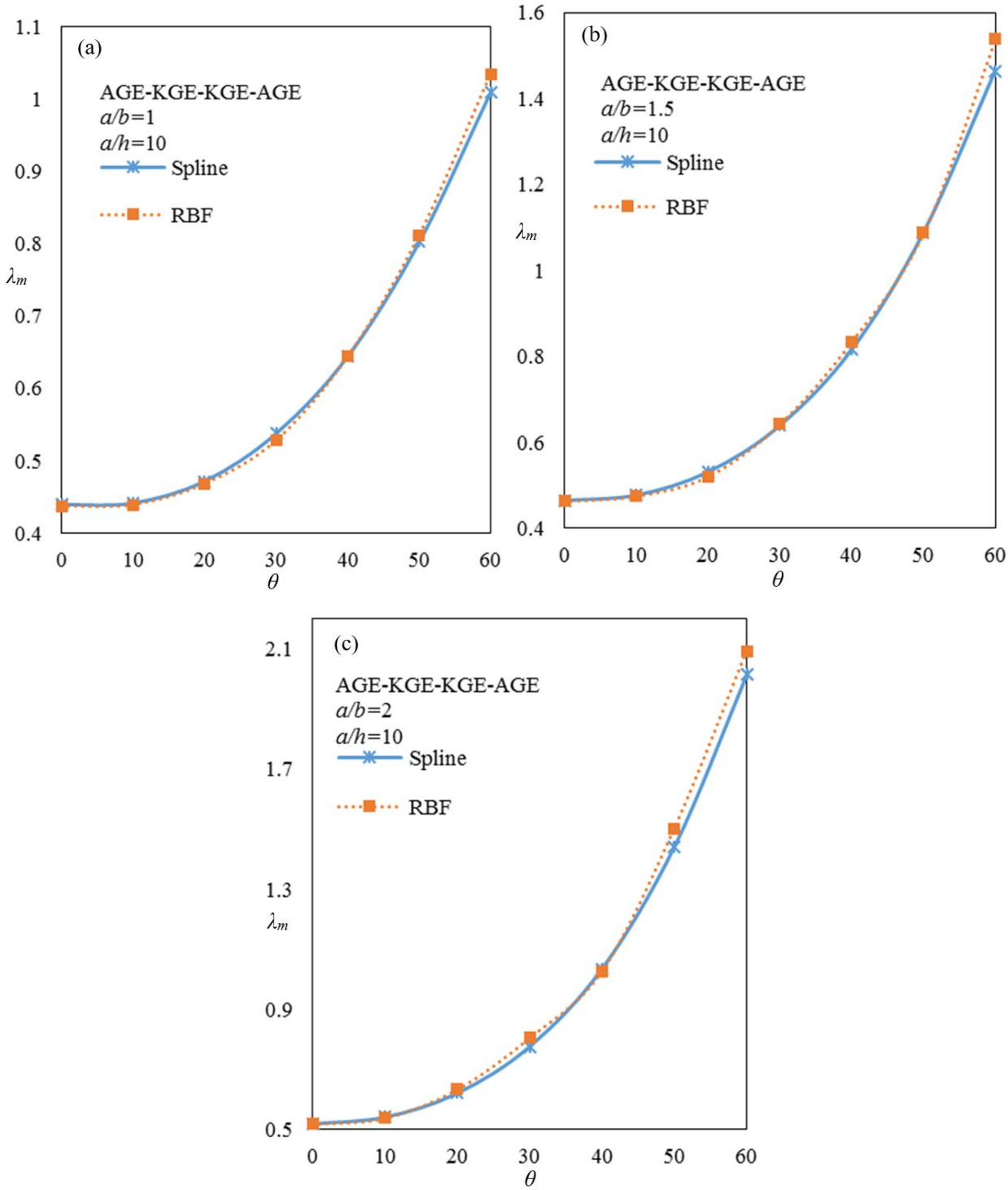

Figure 4: Comparison of two methods for effect of plate angle (θ) on the frequency parameter of a clamped-clamped four layered rectangle plate.

ence for Fig. 4(a) is 0.0246 and the minimum difference is 0.0003. For the Fig. 4(b) the range of difference between the corresponding values is 0.0183 and 0.0002, and the spline and RBF values differ within the range of 0.0015 to 0.0786 for Fig. 4(c). By comparing all these three figure Fig. 4(a), 4(b) and 4(c), Fig. 3(a) gives the lowest frequency values.

5 Conclusion

The frequency parameters for laminated angle-ply plates including first order shear deformation theory under clamped- clamped boundary conditions are analysed. The displacement and rotational functions are approximated by two different approximations namely Spline function and Radial Basis function. The results are analysed with respect to the side-to-thickness ratio, aspect ratio ply-angles and number of layers using two methods. The result's pattern for two layered and four layered plates are discussed and the results obtained by both the methods are significant.

Acknowledgement: The project was supported by Ministry of Higher Education (MOHE), GUP Project Vote No. 11H90 under Research Management Centre (RMC), Universiti Teknologi Malaysia, Malaysia.

References

[1] K.K. Autar, (2006). Mechanics of Composite Materials. (2nd ed.). Boca Ratom, Fl: CRC Press.

[2] R. D. Mindlin, Influence of rotary inertia and shear on flexural motion of isotropic elastic plates: Journal of Applied Mechanics, 18(1951), 31–38.

[3] Y. Stavsky, On the theory of symmetrically heterogeneous plates having the same thickness variation of the elastic moduli: D. Abir, F. Ollendorff, M. Reiner (Eds.), Topics in applied mechanics, American Elsevier, New York, (1965), 105.

[4] P. C. Yang, C. H. Nooris, and Y. Stavsky, Elastic wave propagation in heterogeneous plates: International Journal of Solids and Structures, No. 2 (1966), 665–684.

[5] E. J. Kansa, Multiquadrics- A scattered data approximation scheme with application to computational fluid-dynamics-I: Computers Mathematics with Applications, 19(8/9) (1990), 127–145.

[6] E. J. Kansa, Multiquadrics- A scattered data approximation scheme with application to computational fluid-dynamics-II: Computers Mathematics with Applications, 19(8/9) (1990), 147–161.

[7] A. J. M. Ferreira, Free vibration analysis of timoshenko beams and mindlin plates by radial basis functions: International Journal of Computational Methods, 2(1) (2005), 15–31.

[8] A. J. M. Ferreira, A formulation of the multiquadric radial basis function method for the analysis of laminated composite plates: Composite Structures, 59 (2003), 385–392.

[9] K. M. Liew, X. L. Chen, and J. N. Reddy, Mesh-free radial basis function method for buckling analysis of non-uniformly loaded arbitrarily shaped shear deformable plates: Computer Methods in Applied Mechanics and Engineering, 193 (2004), 205–224.

[10] J. D. Rodrigues, C. M. C. Roque, A. J. M. Ferreira, E. Carrera, and M. Cinefra, Radial basis functions–finite differences collocation and a Unified Formulation for bending, vibration and buckling analysis of laminated plates, according to Murakami's zig-zag theory: Composite Structure, 93 (2011), 1613–1620.

[11] L. Liu, L. P. Chua, and D. N. Ghista, Mesh-free radial basis function method for static, free vibration and buckling analysis of shear deformable composite laminates: Composite Structures, 78 (2007), 58–69.

[12] A. J. M. Ferreira, C. M. C. Roque, and R. M. N. Jorge, Free vibration analysis of symmetric laminated composite plates by FSDT and radial basis functions: Computer methods in applied mechanics and engineering, 194 (2005), 4265–4278.

[13] A. J. M. Ferreira, C. M. C. Roque, and P. A. L. S. Martins, Radial basis functions and higher-order shear deformation theories in the analysis of laminated composite beams and plates: Composite Structures, 66 (2004), 287–293.

[14] A. J. M. Ferreira, C. M. C. Roque, and P. A. L. S. Martins, Analysis of composite plates using higher-order shear deformation theory and a finite point formulation based on the multiquadric radial basis function method: Composites Part B: engineering, 34 (2003), 627–636.

[15] A. J. M. Ferreira, and G. E. Fasshauer, Analysis of natural frequencies of composite plates by an RBF-pseudospectral method: Composite Structures, 79 (2007), 202–210.

[16] G. R. Liu, X. Zhao, K. Y. Dai, Z. H. Zhong, G. Y. Li, and X. Han, Static and free vibration analysis of laminated composite plates using the conforming radial point interpolation method: Composites Science and Technology, 68 (2008), 354–366.

[17] W.G. Bickley, Piecewise cubic interpolation and two point boundary problems: Computer Journal, 11 (1968), 206–208.

[18] K. K. Viswanathan, and P. V. Navaneethakrishnan, Buckling of non-uniform plates on elastic foundation: spline method: Journal of Aeronautical Society of India, 54 (2002), 366–373.

[19] K. K. Viswanathan, and P. V. Navaneethakrishnan, Free vibration study of layered cylindrical shells by collocation with splines: Journal of Sound and Vibration, 260 (2003), 807–827.

[20] K. K. Viswanathan, and K. S. Kim, Free vibration of antisymmetric angle-ply-laminated plates including transverse shear deformation: Spline method: International Journal of Mechanical Sciences. 50 (2008), 1476-1485.

[21] K. K. Viswanathan, and S. K. Lee, Free vibration of laminated cross-ply plates including shear deformation by spline method: International Journal of Mechanical Sciences, 49 (2007), 352–363.

[22] T. Irie, G. Yamada, and R. Kanda, Free vibration of rotating non-uniform discs: spline interpolation technique calculation: Journal of Sound and Vibration, 66 (1979), 13–23.

[23] T. Irie, and G. Yamada, Analysis of free vibration of annular plate of variable thickness by use of a spline technique method: JSME Bulletin, 23 (1980), 286–292.

[24] F. Tornabene, N. Fantuzzi, E Viola, and A. J. M. Ferreira, Radial basis function method applied to doubly-curved laminated composite shells and panels with a general higher-order equivalent single layer formulation. Composites Part B: Engineering, 55(2013), 642–659.

[25] N. Fantuzzi, M. Bacciocchi, F. Tornabene, E. Viola, and A. J. M. Ferreira, Radial basis functions based on differential quadrature method for the free vibration analysis of laminated composite arbitrarily shaped plates. Composites Part B: Engineering, 78 (2015), 65–78.

[26] N. Fantuzzi, F. Tornabene, E. Viola, and A. J. M. Ferreira, A strong formulation finite element method (SFEM) based on RBF

and GDQ techniques for the static and dynamic analyses of laminated plates of arbitrary shape. Meccanica, 49(10) (2014), 2503–2542.
[27] G. R. Liu (2009). Meshfree methods: moving beyond the finite element method. Taylor & Francis.
[28] H. Li, and S. S. Mulay, (2013). Meshless methods and their numerical properties. CRC Press.
[29] L. Sator, V. Sladek, and J. Sladek, Coupling effects in elastic analysis of FGM composite plates by mesh-free methods. Composite Structures, 115 (2014), 100–110.
[30] L. Sator, V. Sladek, and J. Sladek. Analysis of beams with transversal gradations of the Young's modulus and variable depths by the meshless method. Slovak Journal of Civil Engineering, 22(1) (2014), 23–36.
[31] G. K. Sahu, (2013). Static and free vibration analysis of laminated composite skew plate with and without cutout (Doctoral dissertation, National Institute of Technology, Rourkela).
[32] T. Ozaki, P. V. Sosa, and V. Haggan. Reconstructing the nonlinear dynamics of epilepsy data using nonlinear series analysis. J. Signal Processing, vol.3 (1999), no.3, 1530162.
[33] S. Chen, C. F. N. Cowan, and P. M. Grant. Ortogonal least squares learning algorithm for radial basis function networks. IEE Trans. Neural Networks, vol 2 (1991), 302–309.
[34] B. P. Patel, S. S. Gupta, and R. Sarda, Free flexural behaviour of bimodular material angle-ply laminated composite plates: Journal of Sound and Vibration, 286 (2005), 167–186.

Appendix A

$$\overline{Q}_{11} = Q_{11}\cos^4\theta + Q_{44}\sin^4\theta + 2\left(Q_{12} + 2Q_{66}\right)\sin^2\theta\cos^2\theta$$
$$\overline{Q}_{22} = Q_{11}\sin^4\theta + Q_{44}cos^4\theta + 2\left(Q_{12} + 2Q_{66}\right)\theta\cos^2\theta$$
$$\overline{Q}_{12} = \left(Q_{11} + Q_{22} - Q_{66}\right)\sin^2\theta\cos^2\theta + Q_{12}\left(\cos^4\theta + \sin^4\theta\right)$$
$$\overline{Q}_{16} = \left(Q_{11} - Q_{22} - 2Q_{66}\right)\cos^3\theta\sin\theta - \left(Q_{22} - Q_{12} - 2Q_{66}\right)\sin^3\theta\cos\theta$$
$$\overline{Q}_{26} = \left(Q_{11} - Q_{12} - 2Q_{66}\right)\sin^3\theta\cos\theta - \left(Q_{22} - Q_{12} - 2Q_{66}\right)\cos^3\theta sin\theta$$
$$\overline{Q}_{66} = \left(Q_{11} + Q_{22} - 2Q_{12} - 2Q_{66}\right)\sin^2\theta\cos^2\theta + Q_{66}\left(\cos^4\theta + \sin^4\theta\right)$$
$$\overline{Q}_{44} = Q_{55}\sin^2\theta + Q_{44}\cos^2\theta$$
$$\overline{Q}_{55} = Q_{55}\cos^2\theta + Q_{44}\sin^2\theta$$
$$\overline{Q}_{45} = \left(Q_{55} - Q_{44}\right)\cos\theta\sin\theta$$

where,

$$Q_{11} = \frac{E_x}{1 - \nu_{xy}\nu_{yx}},\ Q_{12} = \frac{\nu_{xy}E_y}{1 - \nu_{xy}\nu_{yx}} = \frac{\nu_{yx}E_x}{1 - \nu_{xy}\nu_{yx}},$$
$$Q_{22} = \frac{E_y}{1 - \nu_{xy}\nu_{yx}},\ Q_{66} = G_{xy},\ Q_{44} = G_{yz},\ Q_{55} = G_{xz}$$

Appendix B

$$L_{11} = \frac{d^2}{dX^2} - \beta^2 S_{10} + \lambda^2, \quad L_{12} = \beta\left(S_2 + S_{10}\right)\frac{d}{dX},$$
$$L_{13} = -L_{31} = 2\beta S_{15}\frac{d}{dX},$$
$$L_{14} = L_{41} = S_{15}\frac{d^2}{dX^2} - \beta^2 S_{16},$$
$$L_{21} = -\beta\left(S_2 + S_{10}\right)\frac{d}{dX},$$
$$L_{22} = S_{10}\frac{d^2}{dX^2} - \beta^2 S_3 + \lambda^2,$$
$$L_{23} = L_{32} = S_{15}\frac{d^2}{dX^2} - \beta^2 S_{16},$$
$$L_{24} = -L_{42} = -2\beta S_{16},$$
$$L_{33} = S_7\frac{d^2}{dX^2} - \beta^2 S_{12} - KS_{14} + \frac{I_1}{I_0 a^2}\lambda^2,$$
$$L_{34} = -L_{43} = -\beta\left(S_8 + S_{12}\right)\frac{d}{dX},$$
$$L_{35} = -L_{53} = -KS_{14}\frac{d}{dX},$$
$$L_{44} = S_{12}\frac{d^2}{dX^2} - \beta^2 S_9 - KS_{13} + \frac{I_1}{I_0 a^2}\lambda^2,$$
$$L_{45} = L_{54} = -K\beta S_{13},$$
$$L_{55} = KS_{14}\frac{d^2}{dX^2} - K\beta^2 S_{13} + \lambda^2,$$
$$L_{15} = L_{25} = L_{51} = L_{52} = 0 \text{ and } \beta = n\phi$$